# SSA™
# SNAP-TOP®
# STANDOFFS

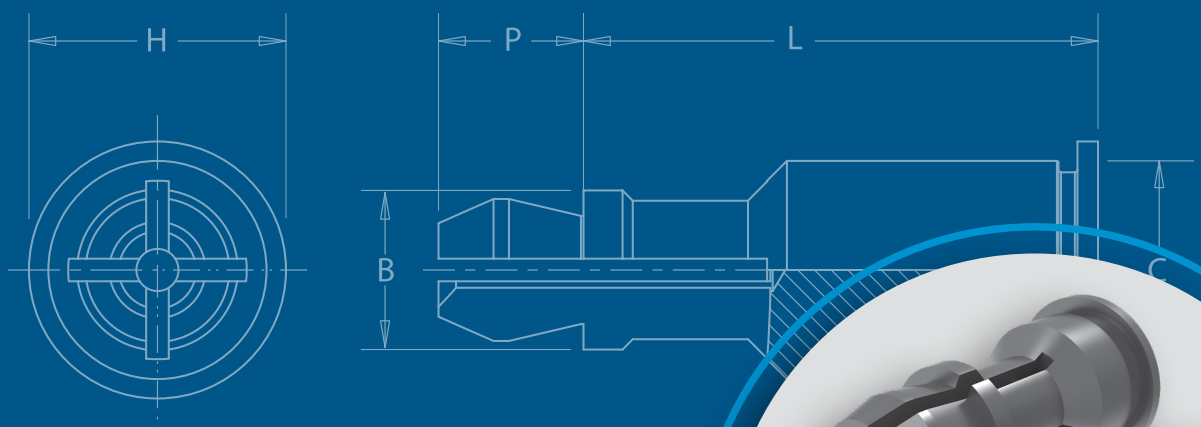

PEM® brand SNAP-TOP® standoffs are designed for permanent installation into metal panels or PC Boards

## PEM® SNAP-TOP® Standoffs are designed for permanent installation into metal panels or PC boards.

- Spring action to hold PC Boards and subassemblies securely.
- Allows for quick removal.
- Eliminates screws and other threaded hardware.
  - Less parts to handle during assembly.
  - Less risk of damaging delicate circuitry because of loose parts falling into your equipment.
- Available in three different mounting styles:
  - Self-clinching for installation into ductile materials
  - Broaching for installation into PC Board and brittle material.
  - Surface mount for installation to PC Board
- Permanently installed in the panel.

Installation forces, pushout and snap forces are listed on page 8.

Fastener drawings and models are available at www.pemnet.com. Custom sizes are available on special order. Contact us for more information.

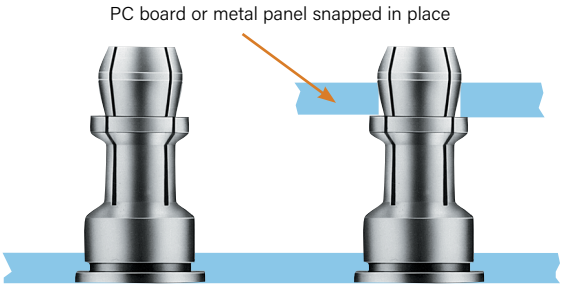


SSA™/SSS™/SSC™ standoffs **clinched** into a metal panel

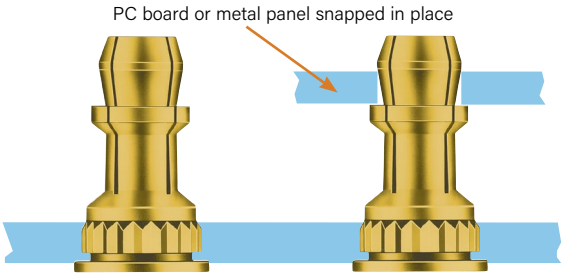


KSSB™ standoffs **broached** into a PC board

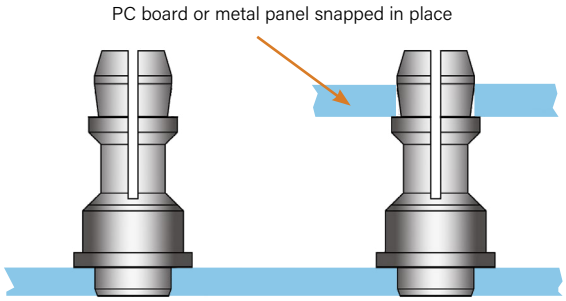


SMTSSS™ standoffs **surface mounted** to PC Board

To be sure that you are getting genuine PEM® brand SNAP-TOP® standoffs, look for the "dimple" registered trademark.

Custom sizes are available on special order. Contact us for more information.



© 2026 PennEngineering.

## SSA™/SSS™/SSC™ Standoffs For Clinching Into Metal Sheets

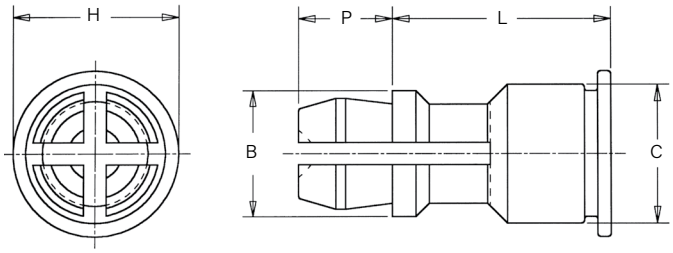


### Part Number Designation

| SS | A | - | 156 | - | 10 | |
|---|---|---|---|---|---|---|
| SS | S | - | 156 | - | 10 | ZI |
| SS | C | - | 156 | - | 10 | |
| Type | Material | | Mounting Hole A Diameter Code | | Length Code | Finish |

**FASTENER MATERIAL:**
SSA: Aluminum
SSS: Carbon Steel
SSC: 400 Series Stainless Steel

**FINISH:**
SSA: Natural
SSS: ZI - Zinc plated per ASTM B633, SC1 (5µm), Type III, colorless, plus clear chromate (1)
SSC: Passivated and/or tested per ASTM A380

All dimensions are in inches.

| Unified | Type / Fastener Material: Aluminum | Carbon Steel | Stainless Steel | Panel 2 (Top) Mounting Hole Diameter Code | Length Code "L" ±.005 (Length Code in 32nds of an inch): .250 | .312 | .375 | .437 | .500 | .562 | .625 | .750 | .875 | 1.00 | B ±.005 | C Max. | H ±.005 | P ±.005 |
|---|---|---|---|---|---|---|---|---|---|---|---|---|---|---|---|---|---|---|
| | SSA | SSS | SSC | 156 | 8 | 10 | 12 | 14 | 16 | 18 | 20 | 24 | 28 | 32 (2) | .188 | .212 | .250 | .141 |

All dimensions are in millimeters.

| Metric | Type / Fastener Material: Aluminum | Carbon Steel | Stainless Steel | Panel 2 (Top) Mounting Hole Diameter Code | Length Code "L" ±0.13 (Length Code in millimeters): 8 | 10 | 12 | 14 | 16 | 18 | 20 | 22 | 25 (2) | B ±0.13 | C Max. | H ±0.13 | P ±0.13 |
|---|---|---|---|---|---|---|---|---|---|---|---|---|---|---|---|---|---|
| | SSA | SSS | SSC | 4MM | 8 | 10 | 12 | 14 | 16 | 18 | 20 | 22 | 25 (2) | 4.78 | 5.39 | 6.35 | 3.58 |

(1) See PEM Technical Support section of our web site for related plating standards and specifications.
(2) This length not available for Type SSA aluminum fasteners.

## Application Data

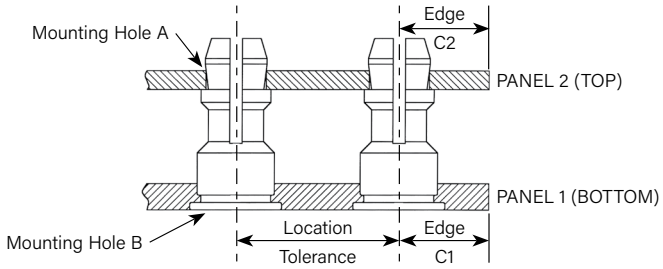


All dimensions are in inches.

| Unified | Type | Panel 1: Hardness Max. (2) | Bottom Mounting Hole B +.003 -.000 | Panel Material | Thickness Min. | Edge Distance C1 Min. (4) | Location Tolerance | Panel 2: Hardness Max. | Top Mounting Hole A +.003 -.000 | Panel Material | Thickness Range (3) | Edge Distance C2 Min. (4) |
|---|---|---|---|---|---|---|---|---|---|---|---|---|
| | SSA | HRB 50 / HB 82 | .213 | Metal | .040 | .260 | ±.005 | No Limit | .156 | PC Board or Metal | .040 - .070 | .100 |
| | SSS | HRB 60 / HB 107 | | | | | | | | | | |
| | SSC | HRB 70 / HB 125 | | | | | | | | | | |

All dimensions are in millimeters.

| Metric | Type | Panel 1: Hardness Max. (2) | Bottom Mounting Hole B +0.08 | Panel Material | Thickness Min. | Edge Distance C1 Min. (4) | Location Tolerance | Panel 2: Hardness Max. | Top Mounting Hole A +0.08 | Panel Material | Thickness Range (3) | Edge Distance C2 Min. (4) |
|---|---|---|---|---|---|---|---|---|---|---|---|---|
| | SSA | HRB 50 / HB 82 | 5.41 | Metal | 1 | 6.6 | ±0.13 | No Limit | 4 | PC Board or Metal | 1 - 1.8 | 2.54 |
| | SSS | HRB 60 / HB 107 | | | | | | | | | | |
| | SSC | HRB 70 / HB 125 | | | | | | | | | | |

(2) HRB - Hardness Rockwell "B" Scale. HB - Hardness Brinell.
(3) Available for thicker boards on special order.
(4) For more information on proximity to bends and distance to other clinch hardware, see PEM® Tech Sheet C/L To Edge.

## KSSB™ Standoffs For Broaching Into PC Boards

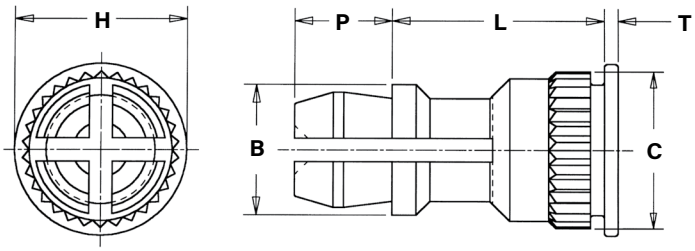


### Part Number Designation

KSS B - 156 - 10 X

- KSS → Type
- B → Material
- 156 → Mounting Hole A Diameter Code
- 10 → Length Code
- X → Finish

**FASTENER MATERIAL:**
Brass

**FINISH:**
Standard: X - Plain
Optional: ET - Electro-plated Tin, ASTM B545 Class B (5µm) with preservative coating, annealed (1)
(Optional ET finish is available on special order with additional charge.)

All dimensions are in inches.

| | Type | Panel 2 (Top) Mounting Hole Diameter Code | Length Code "L" ±.005 (Length Code in 32nds of an inch) | | | | | | | | | | B ±.005 | C ±.003 | H ±.005 | P ±.005 | T ±.005 |
|---|---|---|---|---|---|---|---|---|---|---|---|---|---|---|---|---|---|
| | | | .250 | .312 | .375 | .437 | .500 | .562 | .625 | .750 | .875 | 1.00 | | | | | |
| Unified | KSSB | 156 | 8 | 10 | 12 | 14 | 16 | 18 | 20 | 24 | 28 | 32 | .188 | .226 | .250 | .141 | .020 |

All dimensions are in millimeters.

| | Type | Panel 2 (Top) Mounting Hole Diameter Code | Length Code "L" ±0.13 (Length Code in millimeters) | | | | | | | | | B ±0.13 | C ±0.08 | H ±0.13 | P ±0.13 | T ±0.13 |
|---|---|---|---|---|---|---|---|---|---|---|---|---|---|---|---|---|
| Metric | KSSB | 4MM | 8 | 10 | 12 | 14 | 16 | 18 | 20 | 22 | 25 | 4.78 | 5.74 | 6.35 | 3.58 | 0.51 |

(1) See PEM Technical Support section of our web site for related plating standards and specifications.

## Application Data

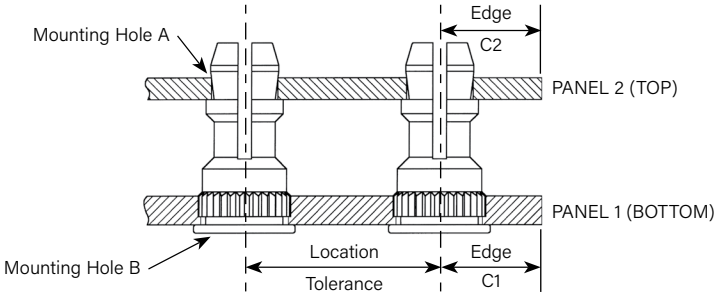


All dimensions are in inches.

| | | Panel 1 | | | | | | Panel 2 | | | | |
|---|---|---|---|---|---|---|---|---|---|---|---|---|
| | Type | Hardness Max. (2) | Bottom Mounting Hole B +.003 -.000 | Panel Material | Thickness Min. | Edge Distance C1 Min. (4) | Location Tolerance | Hardness Max. | Top Mounting Hole A +.003 -.000 | Panel Material | Thickness Range (3) | Edge Distance C2 Min. (4) |
| Unified | KSSB | HRB 65 / HB 116 | .213 | PC Board | .050 | .220 | ±.005 | No Limit | .156 | PC Board or Metal | .040 - .070 | .100 |

All dimensions are in millimeters.

| | | Panel 1 | | | | | | Panel 2 | | | | |
|---|---|---|---|---|---|---|---|---|---|---|---|---|
| | Type | Hardness Max. (2) | Bottom Mounting Hole B +0.08 | Panel Material | Thickness Min. | Edge Distance C1 Min. (4) | Location Tolerance | Hardness Max. | Top Mounting Hole A +0.08 | Panel Material | Thickness Range (3) | Edge Distance C2 Min. (4) |
| Metric | KSSB | HRB 65 / HB 116 | 5.41 | PC Board | 1.27 | 5.59 | ±0.13 | No Limit | 4 | PC Board or Metal | 1 - 1.8 | 2.54 |

(2) HRB - Hardness Rockwell "B" Scale. HB - Hardness Brinell.
(3) Available for thicker boards on special order.
(4) For more information on proximity to bends and distance to other clinch hardware, see PEM® Tech Sheet C/L To Edge.

## SMTSSS™ REELFAST® SNAP-TOP® Standoffs

**NOTE:** REELFAST® SNAP-TOP® SMTSSS™ standoffs are for on-only applications. For removal applications, mounting hole A can be increased to reduce removal force.

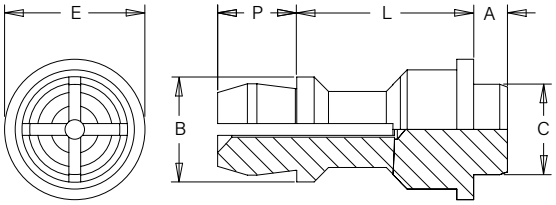


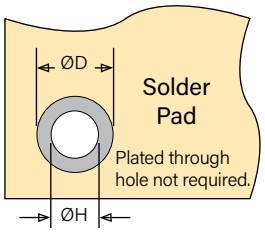


Stencil Masking Examples

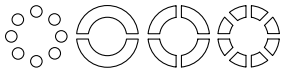

**NOTE:** PennEngineering's standard SMT parts support IPC-A-610 Class 1 and 2 applications. For Class 3 applications, please contact us so your specific requirements can be addressed and met with a custom part.

**FASTENER MATERIAL:**
Carbon Steel

**FINISH:**
ET - Electro-plated Tin, ASTM B545 Class A with clear preservative coating, annealed (1)(2)

(1) See PEM Technical Support section of our web site for related plating standards and specifications.
(2) Optimal solderability life noted on packaging.

All dimensions are in inches.

| | Top Board Mounting Hole A Diameter Code | Type and Material | Length Code "L" ±.005 (Length Code in 32nds of an inch) | | Min. Sheet Thickness | A Max. | C Max. | E ±.005 | B ±.005 | P ±.005 | ØH Hole Size in Sheet +.003 -.000 | ØD Min. Solder Pad |
|---|---|---|---|---|---|---|---|---|---|---|---|---|
| | | | .250 | .375 | | | | | | | | |
| Unified | 156 | SMTSSS | 8 | 12 | .060 | .060 | .161 | .250 | .188 | .141 | .166 | .276 |

All dimensions are in millimeters.

| | Top Board Mounting Hole A Diameter Code | Type and Material | Length Code "L" ±0.13 (Length Code in millimeters) | | | Min. Sheet Thickness | A Max. | C Max. | E ±0.13 | B ±0.13 | P ±0.13 | ØH Hole Size in Sheet +0.08 | ØD Min. Solder Pad |
|---|---|---|---|---|---|---|---|---|---|---|---|---|---|
| Metric | 4MM | SMTSSS | 6 | 8 | 10 | 1.53 | 1.53 | 4.09 | 6.35 | 4.8 | 3.58 | 4.22 | 7 |

### Number Of Parts Per Reel

| Type, Material and Size | Length Code / Number of Parts per Reel | | |
|---|---|---|---|
| SMTSSS-156 | -8 / 280 | | -12 / 220 |
| SMTSSS-4MM | -6 / 300 | -8 / 250 | -10 / 200 |

Packaged on 330 mm recyclable reels. Tape width is 24 mm.
Supplied with polyimide patch for vacuum pick up.
Reels conform to EIA-481.

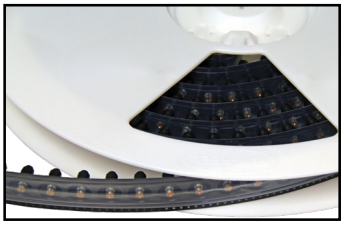

### Part Number Designation

| SMTSS | S | - | 156 | - | 12 | ET |
|---|---|---|---|---|---|---|
| Type | Material | | Mounting Hole A Diameter Code | | Length Code | Finish |

## Application Data

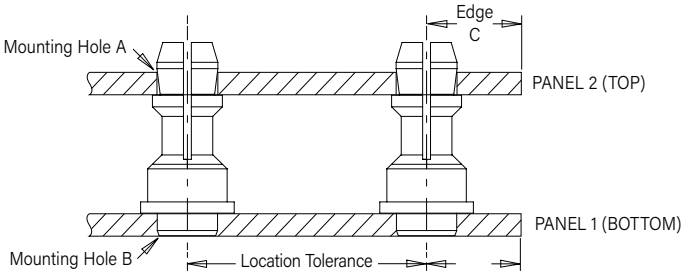


All dimensions are in inches.

| | | Panel 1 | | | | | Panel 2 | | | | |
|---|---|---|---|---|---|---|---|---|---|---|---|
| | Type and Material | Hardness Max. | Bottom Mounting Hole B +.003 -.000 | Panel Material | Thickness Min. | Location Tolerance | Hardness Max. | Top Mounting Hole A +.003 -.000 | Panel Material | Thickness Range | Edge Distance C Min. (1) |
| Unified | SMTSSS | No Limit | .166 | P.C. Board | .060 | ±.005 | No Limit | .156 | P.C. Board or Metal | .040 - .070 | .100 |

All dimensions are in millimeters.

| | | Panel 1 | | | | | Panel 2 | | | | |
|---|---|---|---|---|---|---|---|---|---|---|---|
| | Type and Material | Hardness Max. | Bottom Mounting Hole B +0.08 | Panel Material | Thickness Min. | Location Tolerance | Hardness Max. | Top Mounting Hole A +0.08 | Panel Material | Thickness Range | Edge Distance C Min. (1) |
| Metric | SMTSSS | No Limit | 4.22 | P.C. Board | 1.53 | ±0.13 | No Limit | 4 | P.C. Board or Metal | 1 - 1.8 | 2.54 |

(1) For more information on proximity to bends and distance to other clinch hardware, see PEM® Tech Sheet C/L To Edge.

## Installation

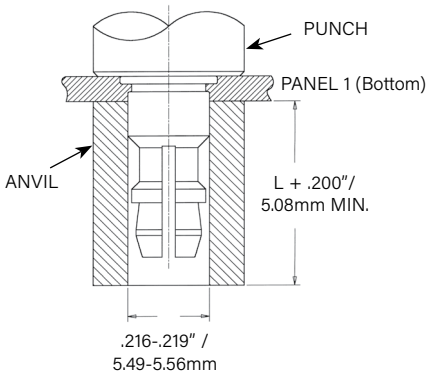


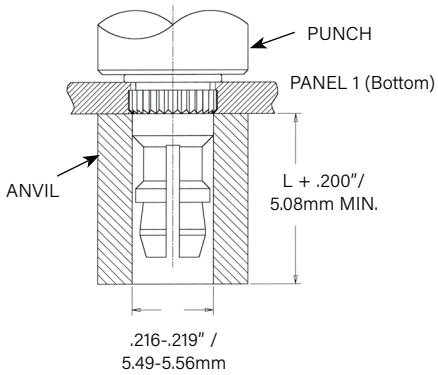


### SSA™/SSS™/SSC™ Standoffs

1. Prepare properly sized mounting hole in Panel 1 (Bottom).
2. Place the fastener through the mounting hole (preferably the punch side) of the panel and into the anvil as shown in the drawing.
3. With punch and anvil surfaces parallel, apply only enough squeezing force to embed the head flush with the panel.

### KSSB™ Standoffs

1. Prepare properly sized mounting hole in Panel 1 (Bottom).
2. Place the fastener through the mounting hole of the board and into the anvil as shown in the drawing.
3. With punch and anvil surfaces parallel, apply only enough squeezing force to bring the head into contact with the board.

### Installation Tooling

| Type | HAEGER® Part No. | | PEMSERTER® Part Number | |
|---|---|---|---|---|
| | Anvil | Punch | Anvil | Punch |
| SSA, SSS, SSC | H-109-6/M3.5L | H-108-0019L | 970200015300 | 975200048 |
| KSSB | H-109-6/M3.5L | H-108-0019L | 970200015300 | 975200048 |

### SMTSSS™ Standoffs

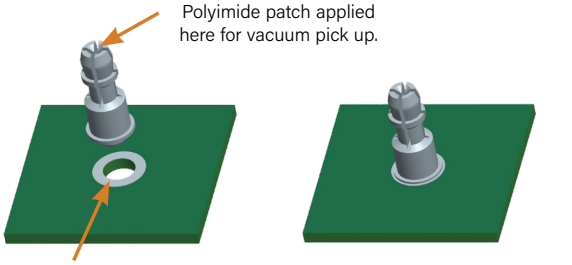


### Installation Notes

- For best results we recommend using a HAEGER® or PEMSERTER® machine for installation of PEM® self-clinching fasteners. Please check our website for more information.
- Visit the Animation Library on our website to view the installation process for select products.

For Additional HAEGER® and PEMSERTER® Tooling Information/Part Numbers visit our tooling wizard

## Performance Data[1]

### SSA™/SSS™/SSC™ Standoffs - Self-clinching

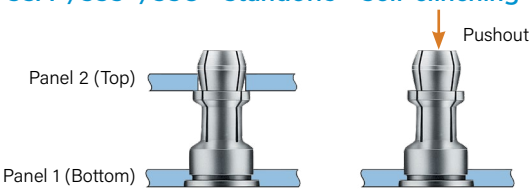


### KSSB™ Standoffs - Broaching

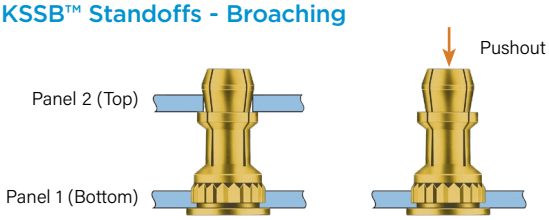


| | | Panel 1 (Bottom) | | | Panel 2 (Top) (Removable) | | |
|---|---|---|---|---|---|---|---|
| | Type | Test Sheet Material | Installation (lbs.) | Pushout (lbs.) | Max. First on Snap Force (lbs.) | Min. First off Snap Force (lbs.) | Min. 15th off Snap Force (lbs.) |
| Unified | SSA | Aluminum | 1500 | 200 | 13 | 3 | 1 |
| | SSS | Aluminum | 1500 | 200 | 20 | 6 | 2 |
| | SSC | Aluminum | 1500 | 200 | 20 | 6 | 2 |
| | SSS | Cold-rolled Steel | 3600 | 400 | 20 | 6 | 2 |
| | SSC | Cold-rolled Steel | 3600 | 400 | 20 | 6 | 2 |
| | KSSB | FR-4 Fiberglass | 500 | 110 | 13 | 3 | 1 |

| | | Panel 1 (Bottom) | | | Panel 2 (Top) (Removable) | | |
|---|---|---|---|---|---|---|---|
| | Type | Test Sheet Material | Installation (kN) | Pushout (N) | Max. First on Snap Force (N) | Min. First off Snap Force (N) | Min. 15th off Snap Force (N) |
| Metric | SSA | Aluminum | 6.7 | 890 | 58 | 13 | 4 |
| | SSS | Aluminum | 6.7 | 890 | 89 | 27 | 9 |
| | SSC | Aluminum | 6.7 | 890 | 89 | 27 | 9 |
| | SSS | Cold-rolled Steel | 16 | 1780 | 89 | 27 | 9 |
| | SSC | Cold-rolled Steel | 16 | 1780 | 89 | 27 | 9 |
| | KSSB | FR-4 Fiberglass | 2.2 | 484 | 58 | 13 | 4 |

### SMTSSS™ Standoffs - Surface Mount

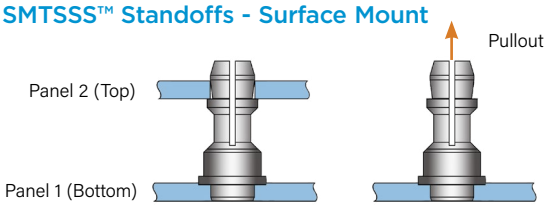


| | Panel 1 (Bottom) | | Panel 2 (Top) | |
|---|---|---|---|---|
| Type, Material and Size | Test Sheet Material | Pullout [2] | Max. Snap-on Force | Min. Snap Retention Force |
| SMTSSS-156 | .062" Single Layer FR-4 | 113 lbs. | 20 lbs. | 6 lbs. |
| SMTSSS-4MM | 1.58 mm Single Layer FR-4 | 500 N | 89 N | 27 N |

### Testing Conditions

| | |
|---|---|
| **Oven** | Quad ZCR convection oven with 4 zones |
| **High Temp** | 473˚F / 245˚C |
| **Board Finish** | 62% Sn, 38% Pb |
| **Board** | .062" / 1.58 mm thick, Single Layer FR-4 |
| **Screen Printer** | Ragin Manual Printer |
| **Vias** | None |
| **Spokes** | 2 Spoke Pattern |
| **Paste** | Alpha CVP-390 Sn96.5/3.0Ag/0.5Cu (SAC305) |
| **Stencil** | .0067" / 0.17 mm thick |

(1) Published installation forces are for general reference. Actual set-up and confirmation of complete installation should be made by observing proper seating of fastener as described in the installation steps. Other performance values reported are averages when all proper installation parameters and procedures are followed. Variations in mounting hole size, sheet material, and installation procedure may affect performance. Performance testing this product in your application is recommended. We will be happy to provide technical assistance and/or samples for this purpose.

(2) With lead-free paste. Average values of 30 test points. The data presented here is for general comparison purposes only. Actual performance is dependent upon application variables. We will be happy to provide samples for you to install. If required, we can also test your installed hardware and provide you with the performance data specific to your application.

All PEM® products meet our stringent quality standards. If you require additional industry or other specific quality certifications, special procedures and/or part numbers are required. Please contact your local sales office or representative for further information.

Regulatory compliance information is available in Technical Support section of our website. Specifications subject to change without notice. See our website for the most current version of this bulletin.

**North America:** Danboro, Pennsylvania USA | E-mail: info@pemnet.com | Tel: +1-215-766-8853 | 800-237-4736 (USA)
**Europe:** Galway, Ireland | E-mail: europe@pemnet.com | Tel: +353-91-751714
**Asia/Pacific:** Singapore | E-mail: singapore@pemnet.com | Tel: +65-6-745-0660
**Kunshan, China:** E-mail: salesgreaterchina@pemnet.com | Tel: +86-512-5276-9300

Visit our PEMNET™ Resource Center at www.pemnet.com • Technical support e-mail: techsupport@pemnet.com